B29/09A HC DP

Self-contained ice maker - Sprayer system
Daily production up to 32 kg

Hotel	■■■■■■■■
Restaurant	■■■■■■■
Fast food	■■■
Bar	■■■■■■■■
Disco	■■■■■■■■
Fish market	
Supermarket	
Medical & SPA	
Industry	

▶ Features

- 23g clear slow melt cube
- AISI 304 SS Scotch Brite finish
- Tropical class +43°C
- Removable and cleanable air filter
- Air cooled (water cooled option available)
- Easy cleanable internal rounded surfaces
- HCFC-Free insulated storage
- RoHS Free
- Disappearing insulated door
- Electromechanical operation
- ON-OFF rocker switch
- Standard voltages
- HFC Free - R290 Refrigerant
- Automatic Washing system
- Internal drain pump

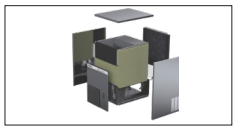

Green-Tech Design

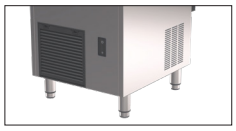

Side openings for better ventilation

Easy clean internal rounded surfaces

Plug-in electrical connection

▶ Available ice cube size

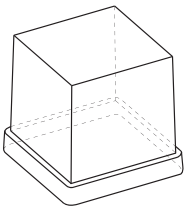

Cube 23 grams
dimensions H 31.5 x L 32.5

▶ Prod. 24h

Air temp.		Water temp.		kg	lbs
10°C	50°F	7°C	45°F	32	71
21°C	70°F	15°C	60°F	29	64

2 Year Warranty
subject to limitations

▶ Certifications available for this model

www.maidaid.co.uk
sales@maidaid-halcyon.co.uk
03457 308070

B29/09A HC DP

maidaid®

Self-contained ice maker - Sprayer system
Daily production up to 32 kg

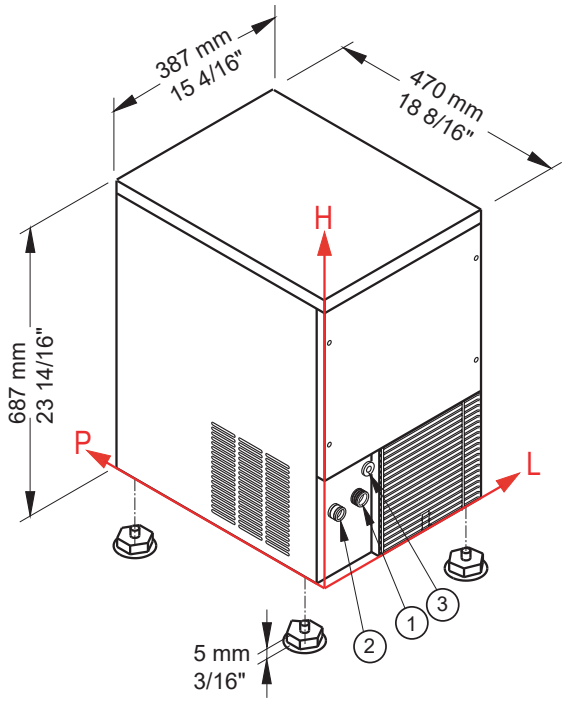

▶ Working conditions

- Location: **Indoor**

	Min	Max
Ambient temperature	+10° C / +50° F	+43° C / 110° F
Water temperature	+3° C / +37° F	+32° C / +90° F
Voltage	-10%	+10%
Water inlet pressure	1bar (14 psi)	6bar (84 psi)

▶ Performance

Air temperature	Water temperature 7° C	45° F	15° C	60° F	21° C	70° F
10° C	32 kg					
50° F		71 lbs				
21° C			29 kg			
70° F				64 lbs		
32° C					24 kg	
90° F						53 lbs

▶ Connections

All measurements are referenced from the rear bottom-left corner (L-H-Ø)

① Water in.: 130 mm / 5 2/16" - 145 mm / 5 11/16" - 3/4"

② Water out.: 49 mm / 1 15/16" - 140 mm / 5 8/16" - 24 mm / 15/16"

③ Electrical connections: 95 mm / 3 12/16" - 209 mm / 8 4/16"

▶ Technical information

Production in 24h	29 kg / 64 lbs
Store capacity, up to	9 kg / 20 lbs
Cooling system	A
Kind of cube	23g
Refrigerant	R290
Standard voltage	220-240 V ~ 50 Hz
Average power consumption	270 W
Fuse	10 A
Electrical consumption	30 kWh/100kg

Water consumption	A: 3 l/kg - 35,9 gal/100 lbs
	W: 12 l/kg - 143,8 gal/100 lbs
Sizes (L-P-H mm)	387 - 470 - 687
(L-P-H in)	15 4/16 - 18 8/16 - 27 1/16
Sizes with pack (L-P-H mm)	440 - 520 - 860
(L-P-H in)	17 5/16 - 20 8/16 - 33 14/16
Net weight	32 kg / 71 lbs
Gross weight	38 kg / 84 lbs
Finish	AISI 304 stainless steel, scotch brite

All the technical information must be considered at the following conditions:
Sizes without feet
Standard Cube (23 g)
Ambient temperature +21° C
Water temperature +15° C
Electrical consumption at +32° C (standard voltage)
Average power consumption at +43° C (standard voltage)

Models and specifications are subject to change without notice

Rev. 03 - Issued Oct 2026